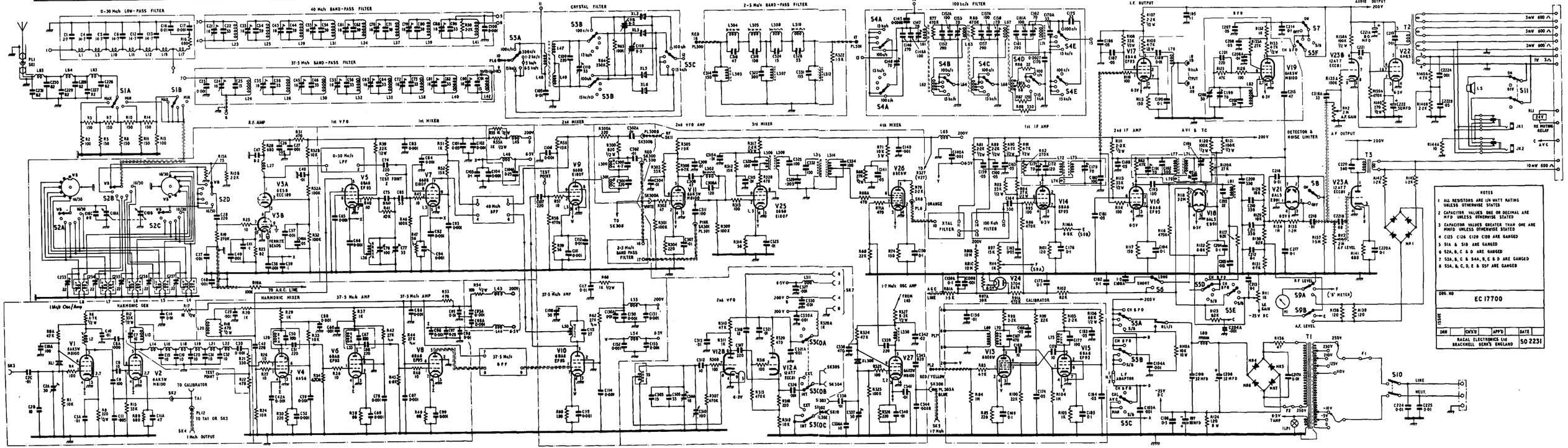

RECEIVER TYPE RA.117